The Freedom System for Maxicom²

Instruction Manual

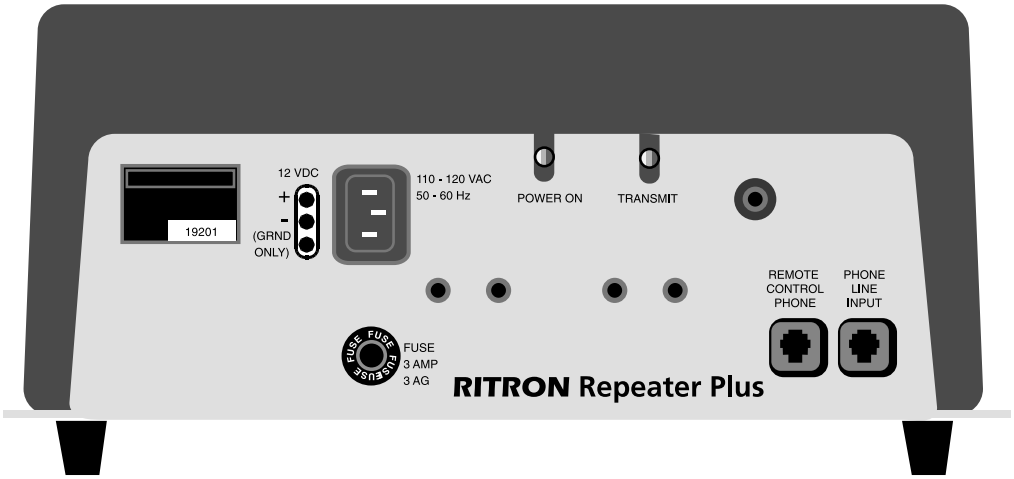

Contents

List of figures

1 Introduction

Welcome to Rain Bird Freedom System

The Maxicom² Freedom System is a radio-operated system that gives you control of the Maxicom² computer and provides voice communication from the field or remote locations. The system consists of a multi-function telephone and radio terminal located at the Maxicom² central location. With the central terminal, you can use a Freedom handheld radio for two-way radio communication with the Maxicom² computer.

System overview

Once you have connected the Freedom System to your Maxicom² computer, you can access a site with the handheld radio to perform the following tasks:

Turn on:

- specific station(s) of any satellite for a specific time
- a contiguous block of stations for a specific time
- a schedule

Advance:

- to the next station in the schedule
- a specific step-type schedule

Pause or Resume:

- the entire system
- a specific channel or station
- a specific step-type schedule

Turn off:

- the entire system
- a specific, channel, station, or site
- a specific schedule(s)

Packing list

Check to be certain that you received the following equipment in the Freedom System box:

- Base unit

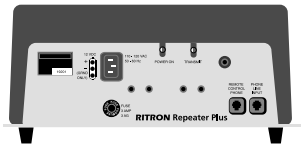

Note: *A Freedom handheld radio unit (voice only) without a keypad is also available. Contact your local Rain Bird Maxicom Distributor for ordering information.*

- Handheld UHF radio unit with DTMF keypad, drop-in battery charger and UHF antenna

- Base central antenna and accompanying hardware

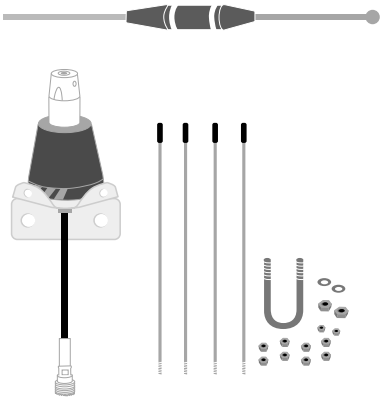

- Belt clip

- Battery pack

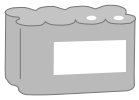

- 120 VAC power supply (battery charger)

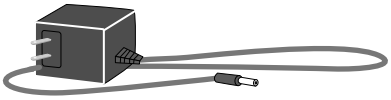

- Computer to repeater cable

- Two 25-feet lengths of RG-8 coaxial cable

- 120 VAC power cord (base unit)

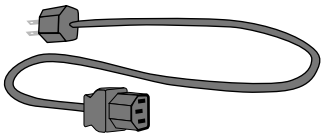

Configuration

You can configure the Freedom System by connecting the base unit to a serial port on your Maxicom^2 computer (see fig. 1). This configuration requires additional equipment that is not included with the Freedom System. Be certain to obtain the additional equipment that is required for the installation. (See page 5, “Additional Equipment.”)

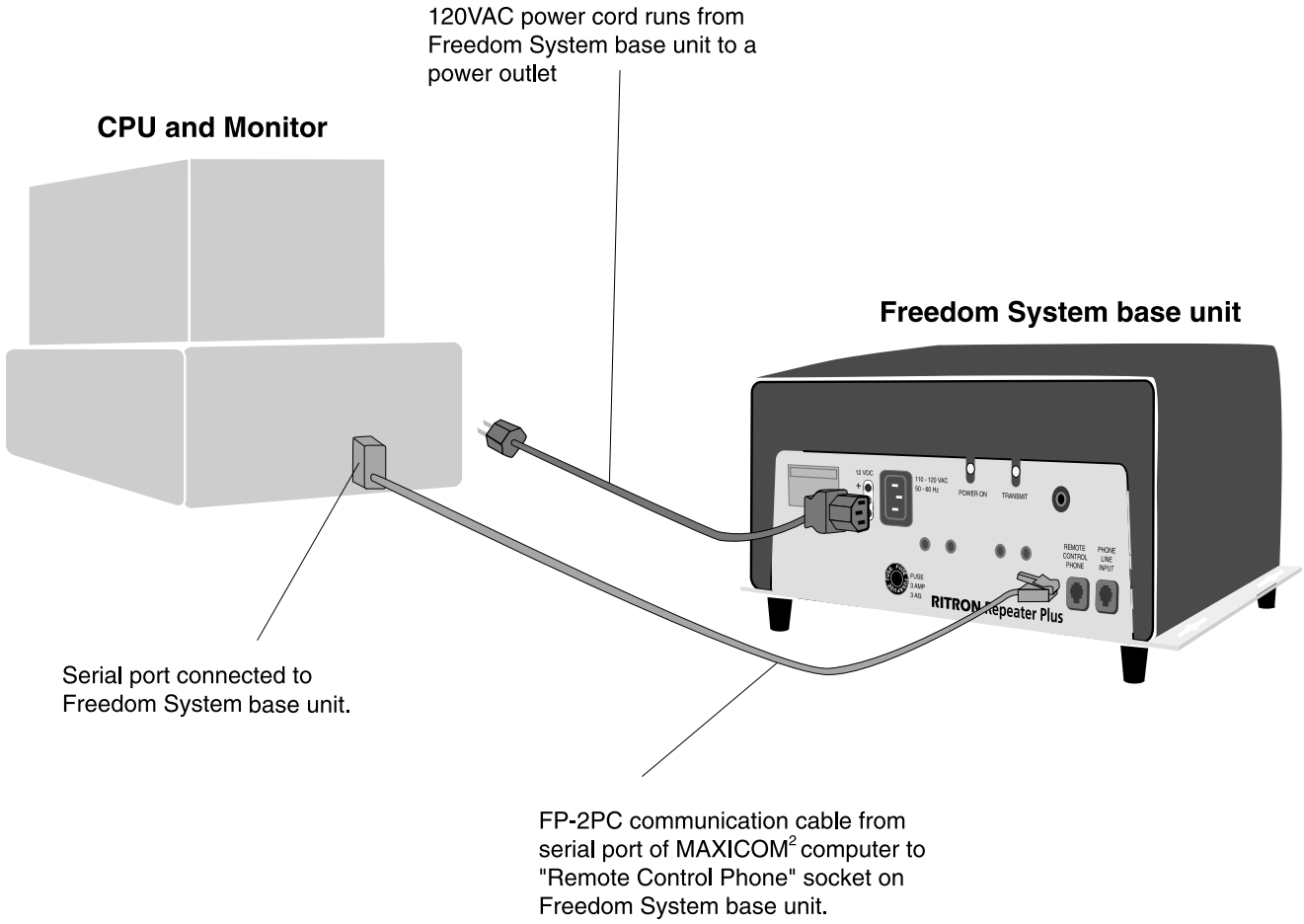

Figure 1: Configuration of connections between the Freedom System and a serial port

Additional required equipment

- Heavy-duty antenna mast for mounting the central antenna (Radio Shack model #15-843). The antenna mast must be five-feet long, 16-gauge steel, enamel finished, and 1 1/4-inch diameter.
- Steel brackets for mounting the antenna mast. Choose one of the following options:

  –Gable roof mount (Radio Shack model #15-889)

  –Eight-inch wall mount (Radio Shack model #15-885)

  –Roof eaves mount (Radio Shack model #15-891)

  –Chimney mount (Radio Shack model #15-839)

  –Three-feet tripod mount (Radio Shack model #15-516)
- Ten-gauge (or larger) bare copper grounding wire for grounding the antenna and coaxial cable surge arrestor or static discharge device.
- Panduit copper grounding terminal lug (model #CX70-14-C).
- Coaxial cable surge arrestor (PolyPhaser model #IS-IE50LU-C1) with bracket for mounting. For ordering information, contact:

  PolyPhaser Corporation
  P.O. Box 9000
  Minden, NV 89423-9000
  Telephone: 1-800-325-7170
  702-782-2511
  www.polyphaser.com
- Two brass ground wire clamps for securing wires to a grounding rod. (May not be required for your installation if you can use an existing MAXI three-rod grounding grid, and you can attach it to the grounding screws on the MGP-1 grounding plate assembly.)
- Three eight-feet long copper clad grounding rods arranged in a triangular pattern. Each rod should be a minimum of eight feet from any other rod. Tie the ground rods together below the ground by using a 10-gauge (or larger) bare copper ground wire between the rods. Connect the wire to the rods using brass clamps (Radio Shack model #15-529).

  The step above is not required if you can connect a three-rod grounding grid for the central Maxicom^2 equipment to the ground wires from the coaxial cable surge arrestor and the antenna.
- Guy wires and anchors to stabilize the antenna. These are only required if the antenna needs to be stabilized.

  –Galvanized guy wire (Radio Shack model #15-030 or #15-031)

  –Guy wire anchors (Radio Shack model #15-825)

  –Guy wire turnbuckles (Radio Shack model #15-829)

  –Guy wire clamps (Radio Shack model #15-850)

  –1 1/4-inch guy wire ring and collar (Radio Shack model #15-835)

Installing the base unit

Select a suitable location for the base unit, either on a desktop or mounted on a wall (see below). To avoid possible interference with the Maxicom² computer monitor, position the base unit at least six feet away from the monitor, but within 25 feet (the length of the communication cable) of the Maxicom² computer. Make sure that you select a location that will allow you to route a 25-feet coaxial cable from the base unit to the central base antenna.

If you want to mount the base unit on a wall, begin with step 1, below. If you place the unit on a desktop, skip to step 3.

1. Place the base unit against the wall. With a pencil, mark the position on the wall where you will drill holes for the four mounting brackets.

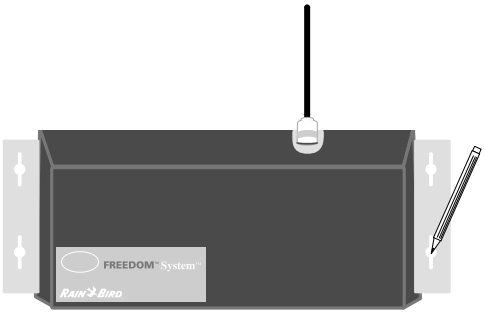

2. Drill the holes and mount the base unit on the wall. The specific screws you will need to mount the base unit will vary according to the type of mounting surface (i.e., wood, cement, masonry, drywall, etc.).

3. Connect the 120 VAC power cord to the Freedom System base unit. Plug the cord into a 120 VAC power outlet on the Maxicom² system's voltage stabilizer unit.

Note: Be sure the antenna is connected prior to connecting to the power supply.

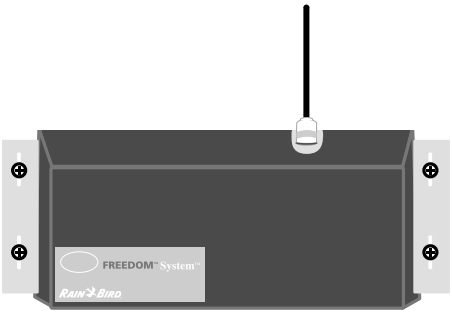

4. Connect the the communication cable's female connector to the Maxicom² serial port. If your Maxicom² computer has a 9-pin serial port, you must purchase a 9-pin to 25-pin adapter from your local computer or electrical parts supplier.

5. Connect the the communication cable's male connector (a phone jack-type connector) to the socket on the Freedom System base unit marked "Remote Control Phone."

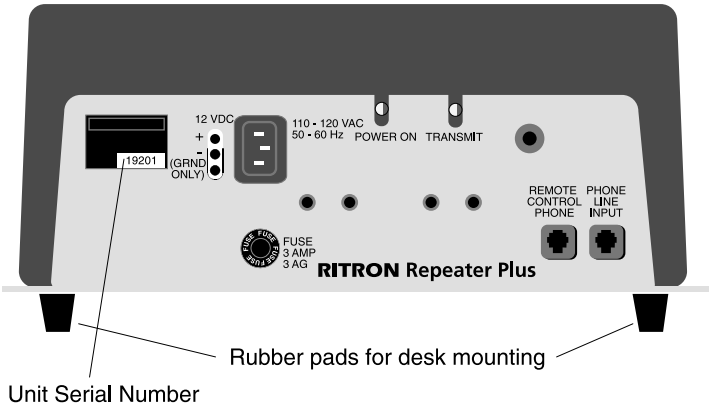

Figure 2: Freedom System base unit

6. Post a copy of the FCC license near the base unit.

Installing the central base antenna and surge arrestor

Select a suitable site for installing the antenna that will be both safe and give it the best performance. Most antennas are supported by a pipe mast that is attached to the side wall, roof, chimney, or eaves of a building with brackets, straps, or a tripod-type mount. Antennas can also be attached to self-supporting towers or masts and may require guying for stability.

Install the antenna directly above your equipment, if possible, so that the antenna coaxial cable can drop straight down and enter the building near the equipment (see fig. 6). Generally, the higher the antenna is above ground, the better it performs. A good practice is to install the antenna about 5 to 10 feet above the roof line, away from power lines and other obstructions. The FCC limits your antenna to a maximum height of 20 feet above the ground.

Make sure the site has proper clearance of any power lines, trees, wires, or other obstructions. Measure the overall height of the antenna:

Height of mast
+ Height of antenna (x 2)

Minimum recommended clearance

To install the central base antenna:

1. Remove the antenna from the box and assemble it according the directions included.
2. Connect one 25-feet length of coaxial cable from the central base antenna to the antenna connection of a coaxial cable surge arrestor.

   Caution: *Do not cut the coaxial cable. Lay out the excess cable in as straight of a line as possible. Do not coil the cable; this will add resistance to data transmission and reception.*

   Before placing the antenna whip into the proper whip adapter, be sure to cut the whip antenna to the proper length which depends on your licensed frequency. See the chart included with the antenna. Also be sure to center the U-bolt bracket between two adjacent ground plane rods (or radials).
3. Secure a 1 1/4-inch diameter antenna mast, which should be at least five-feet long, to the building location you have selected. Use the proper mounting brackets or other equipment required.
4. Attach one end of one of the RG-8/U coaxial cables to the "pigtail" coaxial cable at the antenna. Before you mount the antenna to the antenna mast, refer to fig. 4 for proper waterproofing of this connection.

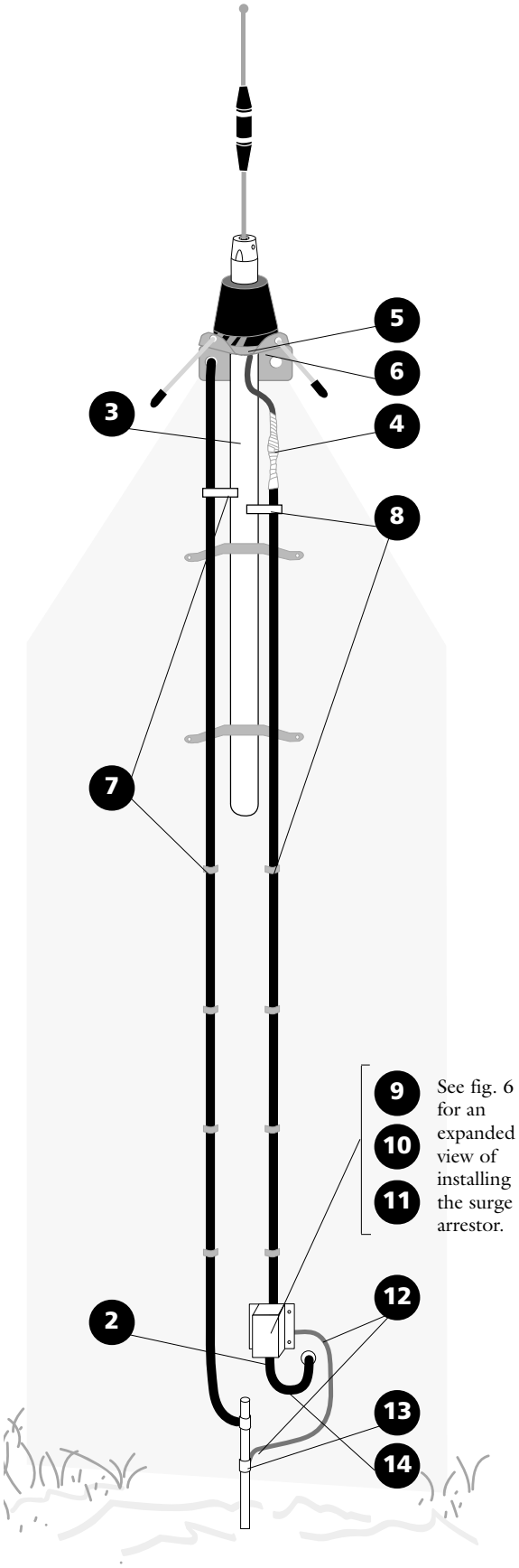

Figure 3: Central base antenna (Installation detail)

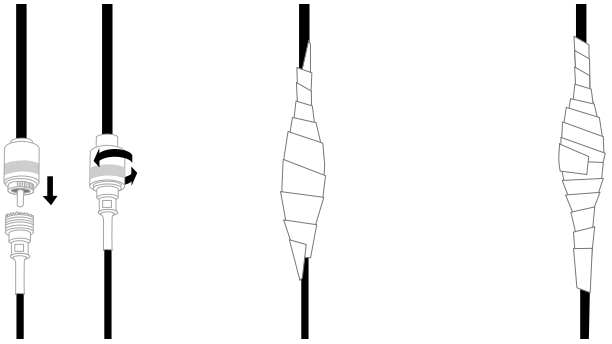

1. Plug the connector ends together. Slide and screw the connector jacket tightly to secure the connection.
2. Wrap the connection with electrical sealant tape, overlapping half the width. Gently press on the tape to form it to the connection.
3. Wrap the connection again with electrical tape, extending the wrapping 1" beyond the end of the sealant tape. Wrap from one end to the other, then reverse direction, wrapping to the center, then stop.

Figure 4: Weatherproofing the coaxial cable connections

5. Attach the antenna to the top of the mast using the U-bolts, nuts, and lock washers provided with the antenna.
6. Attach a #10 GA (or larger) bare copper grounding terminal lug to one side of the U-bolt.

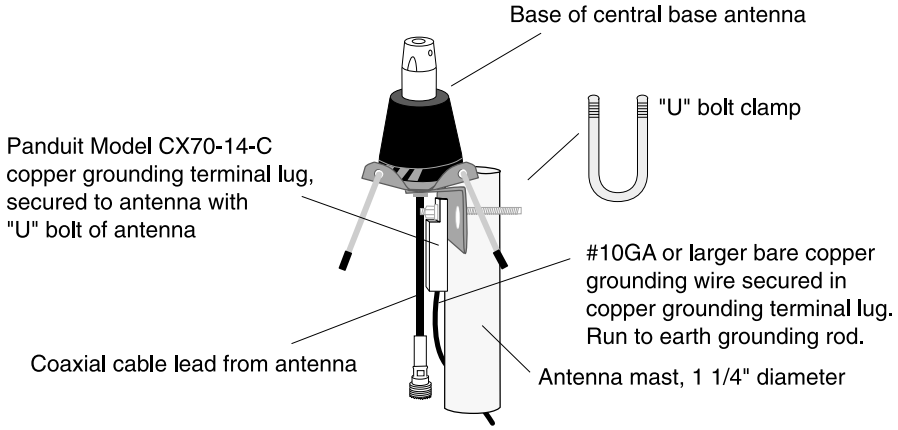

Figure 5: Ground wire terminal lug and ground wire installation detail of central base antenna

7. Route the ground wire along the mast and secure it to both the mast and the side of the building using proper standoff insulators.
8. Route the coaxial cable along the mast on the opposite side from the ground wire. Secure the coaxial cable to both the mast and the side of the building using the proper standoff insulators.
9. Connect the other end of the coaxial cable to the connector marked “Antenna” on the coaxial surge arrestor.
10. Mount the PolyPhaser coaxial cable surge arrestor to the wall of the building near the floor. You can mount the surge arrestor on the outside of the wall (see fig. 6), but make sure to waterproof the coaxial cables connected to it (see fig. 4).

You can also mount the surge arrestor on the inside of the wall (see fig. 6). Securely attach the surge arrestor by using the surface mounting bracket attached to it. Place the surge arrestor as close as possible to where the grounding rod will be grounded.

11. Form a rain drip loop in the coaxial cable at the point before it enters the building (see figs. 3 and 6).

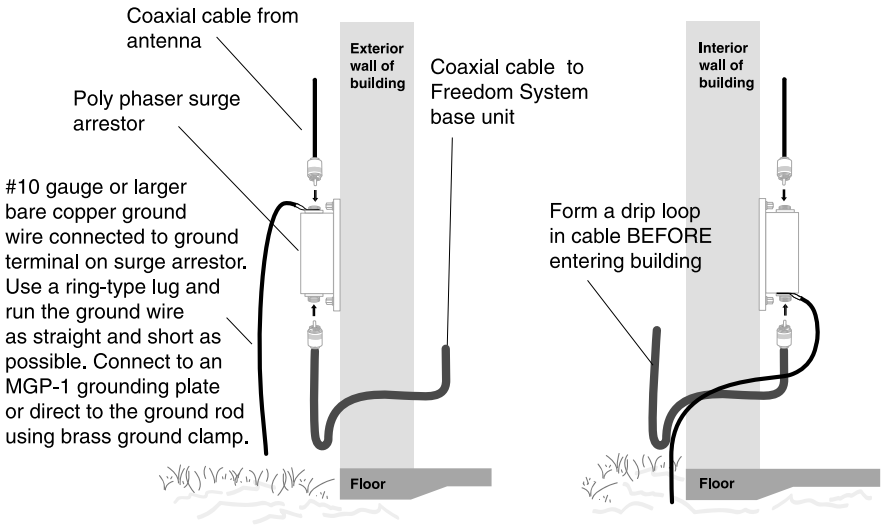

Notes:

- *All exterior connections must be waterproof.*
- *Keep interior wire run to a minimum with coaxial cable because it is not fire rated. All interior cable must be fire rated.*

Figure 6: Exterior and/or interior mounting of surge arrestor

12. Run a #10 GA (or larger) bare copper wire to the ground terminal of the surge arrestor, making it as short and as straight as possible. Connect it to one of the rods of the three-rod grounding grid using a brass ground rod clamp. If you have the MGP-1 grounding plate assembly, you can connect its grounding screws to the ground wire on the existing MAXI three-rod grounding grid. If not, use a brass ground rod clamp and attach it directly to the ground rod.

13. Connect the ground wire from the antenna to one of the rods of the three-rod grounding grid. Attach it directly to the ground rod by using a brass ground rod clamp.

For a MGP-1 grounding plate assembly, connect its grounding screws to the ground wire on the existing MAXI three-rod grounding grid.

14. Connect the other end of coaxial cable from the surge arrestor connection marked "Equipment" and run it to the top (if the base unit is mounted on a wall) or the back (if the base unit is sitting on a horizontal surface) of the base unit.

Installation of the Freedom System telephone interface

For the details on installation of a phone line into the Freedom System and the FCC rules regulations that apply, refer to "Telephone interface with the Freedom System" on pg. 29, and "FCC regulations" on pg. 36.

System setup

Setting passwords and changing them periodically protects your system from unauthorized use. You always have complete access to the Maxicom² system from the computer keyboard. You only need the password to gain access to the Maxicom² system when you are using the Freedom handheld radio unit or remote telephone. You can use one password with the Freedom System. The Freedom password allows access to all levels of the Freedom System.

Setting or changing the Freedom password

To change the Freedom password:

1. With the Freedom tab displayed, in System Properties, enter the Freedom Password.

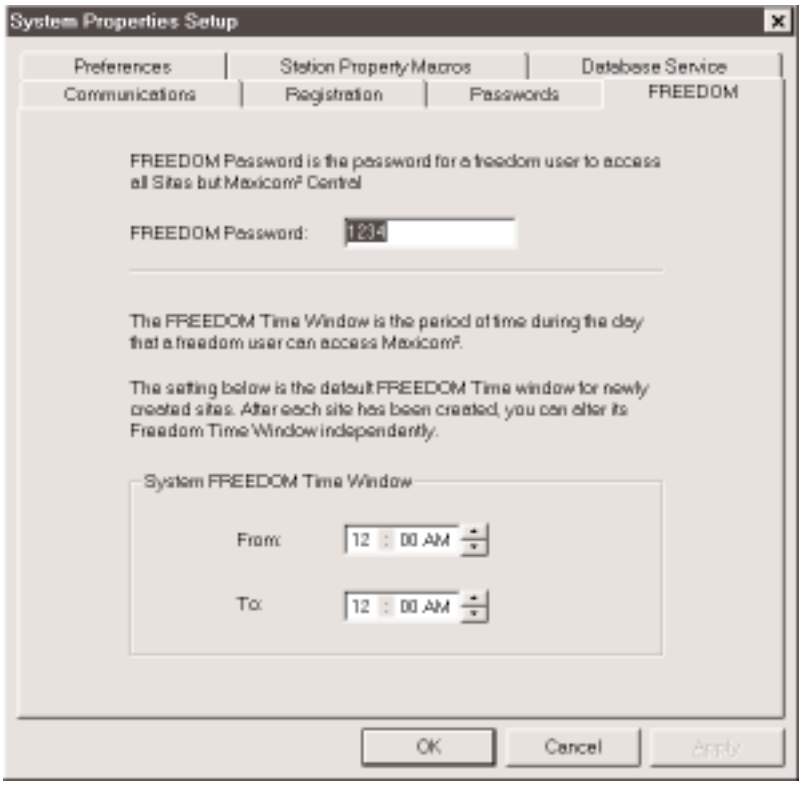

2. Click the **OK** button.

   Your new Freedom password is saved.

Setting the Freedom Time Window

After defining as many of the passwords as you need, you can enter the start and end times for the Freedom Time Window. The Freedom Time Window prevents remote users from accessing the system during certain periods of the day.

For example, if you want remote users to access the system only from the hours of 8 a.m. to 4 p.m., you would enter 8:00 a.m. for the window's start time and 4:00 p.m. for the window's end time. Maxicom² will then block all remote accesses that are not initialized during those times (except when the master password is used).

If you do not enter start and end times, both times will default to 12:00 a.m., meaning the window is always open.

To set the Freedom Time Window:

1. Select **Open** from the Site menu.

   The Open An Existing Site dialog box opens. If you have not set up any sites yet in Maxicom², see the Maxicom² manual for instructions on setting up sites.

2. Highlight a site for which you would like to set the Freedom Time Window, and then select **Open**.

   The site opens.

3. Select **Properties** from the Site menu.

   The Site Properties Setup dialog box opens.

4. Click on the **Contact** tab.

The Contact Sheet comes to the front. Note that at the bottom of the sheet, you are able to set the Freedom Time Window.

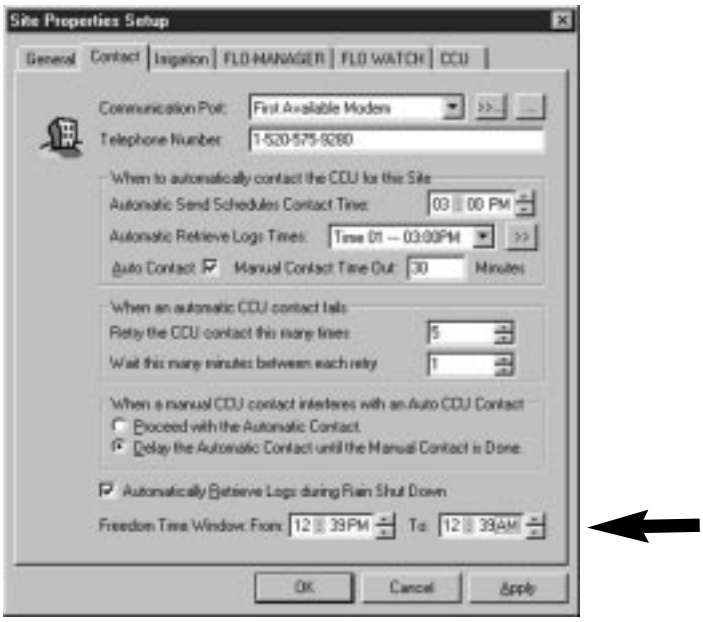

5. Enter the time to start the Freedom Time Window. Use a 12-hour time format. Or, use the scroll buttons on the right side of the field to enter the time without typing. You can enter only one start time.

6. Enter the time to end the Freedom Time Window. Use a 12-hour time format. Or, use the scroll buttons on the right side of the field to enter the time without typing. You can enter only one end time.

7. When you have finished setting the Freedom Time Window, click on **OK** to save your changes.

The Freedom Time Window is set.

Note: The Freedom Time Window in the System Properties dialog box is a default for all new sites. It does not effect any of the existing sites.

System operation

Understanding the handheld radio

The Freedom handheld radio allows you direct access to the Maxicom² computer from the field. By entering commands with the radio keypad, you have field control for individual stations as well as total system control. The radio can also be used to contact other radios at your site or to receive and make telephone calls from the field.

While using the radio, you must keep in mind three important rules:

- Monitor the frequency before you talk.
- You must enter a complete command or a **##** at least once every four minutes or Maxicom² will hang up.
- Once you start a command by entering **##**, you must complete it within five seconds or Maxicom² will disregard the command and you will hear the error beep.

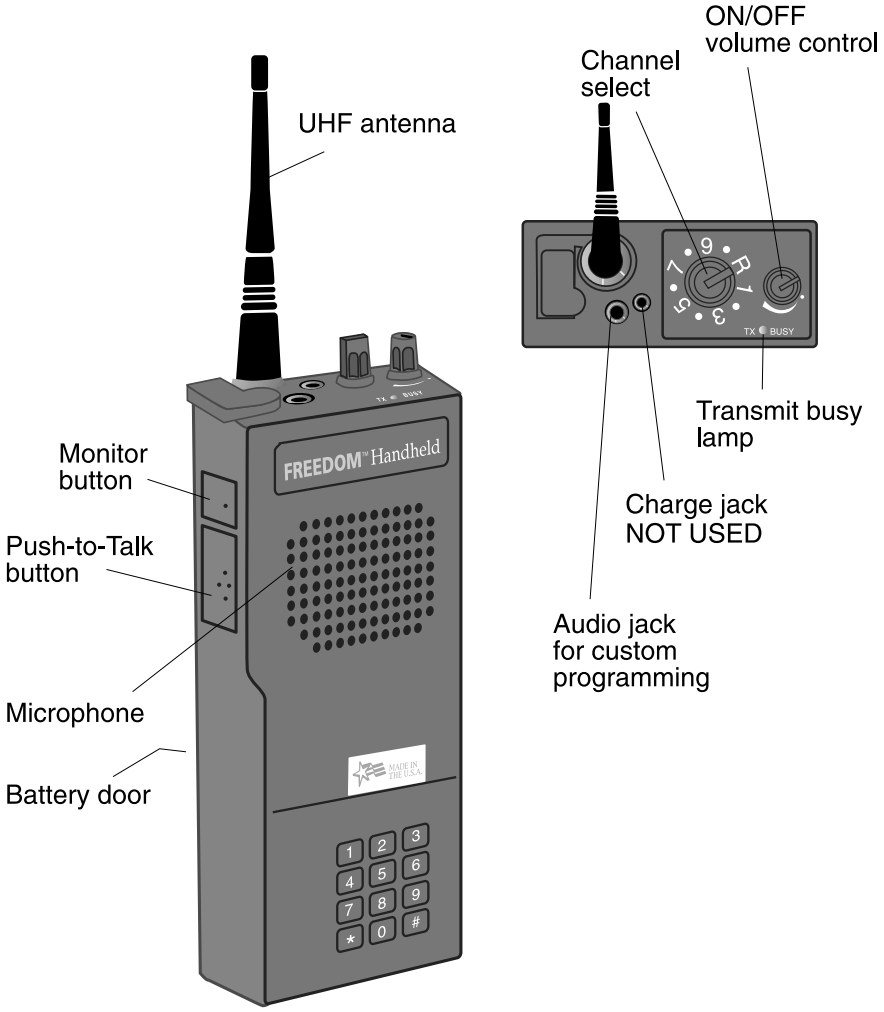

Figure 7: Handheld radio and unit controls

Sending commands

To use the radio to send commands:

1. Turn the volume control knob to the **ON** position.

   The radio runs a quick self-test when you turn it on. If the radio works properly, you will hear a short confirmation tone to indicate the radio is ready for use. If the radio does not work properly, consult Chapter 4, Troubleshooting the Freedom System on pg. 25. If you still have difficulty with the radio, contact your Rain Bird Maxicom distributor.

2. Select the proper channel with the channel select knob. See the handheld radio manual for information on selecting channels.

3. Press and hold the **PTT** (push-to-talk) button to enter commands using the touch-tone keypad or to talk into the microphone.

   See "System commands" on pg. 16 for a list of available commands.

   As you enter commands with the radio keypad, Maxicom^2 will respond with beeps to indicate whether or not there were any errors. See "Freedom System responses," below, for descriptions of the responses.

The length of a telephone call is limited to five minutes. The Freedom System will emit two short warning beeps 20 seconds before the five minutes expire.

Freedom System responses

As you enter commands into the phone, Maxicom^2 will respond with beeps from the radio to indicate whether or not there were any errors. The following is a list of the possible Freedom System responses:

- **No response.** No contact has been made with the Freedom System base unit.
- **One short beep.** The leading ## had been received (off-line).
- **Two short beeps.** The leading ## has been received (on-line).
- **Four short beeps.** OK; the command you entered is being executed and Maxicom^2 is ready to receive another command.
- **One long beep.** Error; reenter the command.
- **Many short beeps.** Wait; Maxicom^2 is contacting the site you requested or is hanging up.
- **Many long beeps.** Busy signal; Maxicom^2 is already on-line with a site or a local user at Maxicom^2 terminated your contact.
- **Error beep...busy signal.** The Freedom Time Window is closed.
- **Wait beep...error beep...busy signal.** The site you requested did not respond to the Maxicom^2 system call.

Interaction between a Freedom user and a local user at Maxicom^2

The local user at Maxicom^2 is always given priority over the Freedom users in the field. If a local user is manually on-line with a site, the Freedom users are blocked out (sent a busy signal). If a Freedom user is on-line, the local user may terminate the Freedom contact at any time.

If the local user is manually on-line with a site, and a Freedom user attempts to initiate contact, a message will appear on the Maxicom² screen, informing the local user that Freedom contact is being attempted. The message will ask if the local user wants to terminate contact. The default answer is "no."

If the local user wishes to monitor the Freedom user's activities:

1. Open the site to be monitored.
2. From the Site menu, select **Manual Contact, Monitor Site**.
3. Open the Communications window. Select the **COM** port that Freedom is connected to. You will see both the commands and the actual keys being entered.

   All activities initiated by the Freedom user appear in the log. Maxicom² dynamically updates the log while the Freedom user is on-line with the site.

The local user can terminate Freedom contact at any time by selecting the Disconnect command, which displays a warning message. The message indicates that a Freedom user is on-line and asks if the local user wants to terminate the Freedom contact. While the local user can then answer "yes" or "no," the default answer is "no." If the local user terminates the Freedom contact, the Freedom user receives a busy signal.

System commands

Operating Maxicom² from the radio or remote telephone

To operate Maxicom² from the handheld radio or a remote telephone, you must enter commands.

Command format examples

Each command must begin with the ## sign for you to gain access to the system. This sign is followed by the individual parameters for the group, channel, station, time, etc., each separated by the # sign. You must enter the ## sign to terminate a command. The handheld unit will confirm you choices with different beeps. See "Freedom System responses" on pg. 15 for the meaning of the beeps.

Entering access codes

You can enter the access code from the Freedom radio or by remote telephone. To enter a password (it must have four digits; in the example below, we use 4321) from the radio or telephone, use the following example:

To turn on access:

Press **##4321#1##**

You have accessed the system. The "1" in the above command opens the system to access for the default time period, which is eight hours.

To turn off access for an indefinite time period:

Press **##4321#2##**

You have closed access to the system. The "2" in the above command closes access to the system for an indefinite time period.

To turn off access for a specific time period:

Press **##4321#2#(1 – 9)##**

You have closed access to the system for a specific period (1 – 9 hours, depending upon your selection).

Contacting the Freedom System by telephone

1. Dial the Freedom System telephone number.
2. Wait until you hear the Freedom System answer.
3. Enter **##XXXX#1#tt##** (XXXX = password)

   Enter a time (tt) only if you desire an access time other than the eight-hour default access time.
4. Enter **##71#SCHD##** (71 = turn on a specific schedule; SCHD = the number of the specific schedule you want to start). You can enter as many schedules as you wish.
   Example: Access the Freedom System with password 4321 for a period of two hours and then turn on schedule 112 and schedule 23.

   a. Dial the Freedom System telephone number.

   b. Wait until you hear the Freedom System answer.

   c. Enter **##4321#1#2##**

      Access to the system is turned on with the password 4321 for two hours.

   d. Enter **##71#112##**

      Schedule 112 is turned on.

   e. Enter **##71#23##**

      Schedule 23 is turned on.

   You can enter any other commands to the Freedom System via telephone in the same manner.

Accessing a typical site with the Freedom System

After you have initialized the Freedom System in Maxicom², you may access a site. This section describes a step-by-step access of a typical site. For a detailed description of the available commands, see "Summary of Freedom System commands" on pg. 19.

1. Dial the phone number for the Maxicom² system Freedom modem.

   When the Freedom modem answers, you will hear one short beep.
2. Enter your password. For example, if your password is "1111," you would enter **##1111##**.
   - If you enter a valid password, you will hear the OK beep (four short beeps) and then you are ready to move to the next command.
   - If you enter an invalid password, you will hear the error beep (one long beep). If you hear the error beep, reenter your password until you hear the OK beep.

3. Specify the site number you would like to contact. For example, to contact site number 5, enter **##5##**.

   It takes Maxicom² approximately 30 seconds to contact a site. You will hear wait beeps, which are short beeps occurring once every second.

   - If you entered a valid site number, you will hear the OK beep.
   - If you entered an invalid site number, you will hear the error beep. If you hear the error beep, enter a valid site number.

4. Verify that you are on-line with the site by entering **##**.

   - If you are on-line with the site, you will hear two short beeps.
   - If you are not on-line with the site, you will hear one short beep. Repeat steps 3 and 4 to try to contact the site again.

5. Enter commands for the site. For example, if you want to turn on channel three, station twelve, for five minutes, you would enter **##1#3#12#5##**.

   - If you entered the command correctly, you will hear the OK beep.
   - If you entered the command incorrectly, you will hear the error beep. If you hear the error beep, enter the command again.

6. When you have finished entering commands for the site, enter **#** and then hang up the phone.

Contacting different sites with one phone call

There may be times when you want to contact a site immediately after you have contacted a different site (i.e., if site 5 is on one side of the road and site 6 on the other). Or you may want to send some commands to control Maxicom², which is site 0, and with the same phone call, send commands to one or more of the other sites. With just one phone call, you can send commands to one site and immediately call another site.

For the example mentioned above where site 5 is on one side of the road and site 6 on the other, you would:

1. Contact site 5 and send the commands you want.
2. Use command 8 **(##8##)** to tell Maxicom² to hang up with that site.
3. You will hear the "wait" beep. (It takes Maxicom² approximately 10 seconds to hang up with a site.)
4. After Maxicom² has hung up, you will hear the "OK" beep.

You are then ready to select a different site, enter a new site number, then enter the commands. This process of going from one site to another within the same phone call can be repeated indefinitely.

Summary of Freedom System commands

There are two sets of commands for the Maxicom² Freedom System:

- The first set of commands are used while on-line with a CCU. These commands are the most commonly used commands and are available to all of the passwords. See "Commands used while on-line with a CCU," below.
- The second set of commands controls the features within Maxicom². These commands are available only after entering the master password. In order to use the set of commands that control Maxicom², the user simply specifies site number 0. See "Commands used to control Maxicom² features," pg. 23.

As you read through these commands, you will notice that:

- **"1"** always means you are turning something on (a site, a schedule, a station, etc.).
- **"2"** always means you are turning something off (a site, a schedule, a station, etc.).

Commands used while on-line with a CCU

For the commands listed in the following table:

- **cc = channel**

  ss = station(s)

  tt = minute(s)

  SSSS = schedule(s)
- cc, ss, and tt can be 1 or 2 digits
- SSSS can be 1, 2, 3, or 4 digits
- Anything in brackets **{ }** is optional and unlimited in length.

  Note: *If you are controlling a satellite with more than 24 stations, you can enter:the base channel number and the actual station number (i.e., channel 1, station 31)*

  OR

  the actual channel number and corresponding station number(i.e., channel 2, station 7).

Command name	Format	Description	Examples
Command 1			
Turn on station(s)	**##1#cc#ss {#ss#ss}#tt##**	Turns on stations(s) **ss** on channel **cc** for **tt**	**##1#3#5#11#13##** Turns on stations 5 and 11 on channel 3 for 13 minutes. If you enter more than one station, then the time must be entered. **##1#5#12##** Turns on station 12 on channel 5 for two minutes. If you enter only one station and do not specify any time, then the default time is two minutes.
Command 2			
Turn off a channel or site	**##2##**	Turns off the entire site.	**##2##** Turns off the entire site. If you turn off the entire site, all of the stations will turn off.
	##2#cc##	Turns off the channel cc.	**##2 #19##** Turns off channel 19. If you turn off a specific channel, only the stations that are manually run turn off; stations run by schedules remain on.
Command 3			
Turn on a contiguous block of stations (i.e., stations 1-10)	**##3#cc#ss#ss# tt##**	Turns on stations ss through ss on channel cc for tt minutes.	**##3#8#9#21#10##** Turns on stations 9 – 21 on channel 8 for 10 minutes.
Command 4			
Advance a channel	**##4#cc##**	Turns off all stations on channel cc and turns on the next available station.	**##4#9##** Turns off the stations on channel 9 that are currently on and turns on the next available station. Use commands 3 and 4 together. For example, to verify that each station on a channel works properly, use command 3 to turn on stations 1– 24 for one minute each. After a station turns on and you verify that it is works properly, you can advance to the next channel without waiting the entire minute.

"5X Commands" – Commands 52, 55 and 56

5X commands are diagnostic tools rather than irrigation supplements. If there is a problem with a particular head, you can turn it on with command 51, interrupt it with command 55, work on it, and then resume with command 56.

Command 51			
Turn on a single station	**##51#cc#ss##5**	Turns on station ss on channel cc for 5 minutes.	**##51#21#5##** Turns on station 5 on channel 21 for five minutes. This command differs from command 1 because: – it only applies to one station. – the station started by this command can be paused, interrupted, or turned off by the other.

Command name	Format	Description	Examples
Command 52 Turn off the station turned on by command 51	**##52##**	Turns off the station previously turned on by command 51.	**##52##** The station turned on by command 51 turns off. You do not have to specify the channel and station because Maxicom² maintains that information. If you use this command without first turning on a station with command 51, you hear an error beep.
Command 55 Pause the station turned on by command 51	**##55##**	Interrupts the operation of a station previously turned on by command 51.	**##55##** The station turned on by command 51 pauses. You do not have to specify the channel and station because Maxicom² maintains that information. If you use this command without first turning on a station with command 51, you hear an error beep.
Command 56 Resume the station paused by command 55	**##56##**	Resumes the operation of the station paused by command 55.	**##56##** The station paused by command 55 resumes operation. You do not have to specify the channel and station because Maxicom² maintains that information. If you use this command without first pausing a station with command 55, you hear an error beep.
Command 71 Turn on a schedule	**##71#SSSS##**	Turns on schedule SSSS.	**#71#105##** Turns on schedule 105.
Command 72 Turn off a schedule	**##72#SSSS##**	Turns off schedule SSSS.	**##72#525##** Turns off schedule 525. If you omit SSSS, all running schedules turn off, therefore, ##72## turns off all schedules that are on.
Command 74 Advance a schedule	**##74#SSSS##**	Advances schedule SSSS.	**##74#119##** Advances schedule 119. If you omit SSSS, all running schedules advance, therefore, ##74## advances all schedules that are on.
Command 75 Pause a schedule	**##75#SSSS##**	Interrupts the schedule SSSS.	**##75#201##** Pauses schedule 201. If you omit SSSS, all running schedules pause, therefore ##75## pauses all schedules that are on.

Command name	Format	Description	Examples
Command 76			
Resume a paused schedule	**##76#SSSS##**	Resumes an interrupted schedule.	**##76#15##** Resumes schedule 15. If you omit SSSS, all paused schedules resume, therefore ##76## resumes all paused schedules.
Command 8			
Hang up on the current site and begin the command sequence with another site.	**##8##**	Hangs up on the site currently on-line. Enables user to enter a new site without re-entering a password.	**##8##** Site currently on-line is disconnected; user enters new site for contact without re-entering a password.
Command 9			
Stay on-line with the current site after the phone is hung up	**##9##**	Allows Maxicom² to stay on-line with the current site after the user hangs up. Maxicom² stays on-line with the site until the remote user contacts it again, or until 30 minutes pass, whichever comes first. During this time, all passwords are locked out.	**##9##** Allows the user to send commands to a site, move to a different location in the same site, then send more commands. For example, if you send commands to site 8, but need to check another part of the site before completing the commands to site 8, enter ##9##, wait for the OK beep, then enter # and hang up. You have 30 minutes to contact Maxicom² again. At the other site, call Maxicom² and enter your password. You will hear the OK beep meaning you are on-line. You can now enter commands. If you hear the error beep followed by a busy signal, the window is closed. Someone at Maxicom² may have terminated your Freedom contact. To determine your contact status, enter your password and then enter **##**. If you hear one beep, you are off-line; if you hear two beeps, you are on-line. If Maxicom² has hung up, contact the site in a normal way.

Commands used to control Maxicom^2 features

For the following commands listed in the table below:

- **t = hour(s)**

  SSS = site(s)
- SSS can be 1, 2, or 3 digits.
- Anything in brackets **{ }** is optional and unlimited in length.

Command name	Format	Description	Examples
Command 1 Set site(s) to auto-on	**##1{#SSS...}##**	Sets site(s) SSS to auto-on.	**##1#3#5#11#15##** Sets sites 3, 5, 11, and 15 to auto-on. If no sites are entered, then all sites are set to auto-on. Therefore, ##1## turns on all sites.
Command 2 Set site(s) to rain shut-down	**##2{#SSS...}##**	Sets site(s) SSS to rain shut-down.	**##2#19#25##** Sets sites 19 and 25 to rain shut-down. If no sites are entered, all sites are set to rain shut-down. Therefore, #2# sets all sites to rain shut-down.
Command 6 Temporarily open or close the Freedom Time Window	**##6#1#t##**	Opens the Freedom Time Window for t hour(s). If t is not specified, the window stays open for one hour.	**##6#1#5##** Opens the Freedom Time Window for the next five hours, regardless of the closing time set in Maxicom^2. All passwords can access the system during this time period.
	##6#2#t##	Closes the Freedom Time Window for t hour(s). If t is not specified, the window stays closed until someone uses the master password to re-open the window.	**##6#2##** Closes the Freedom Time Window until the master password reopens the window.

4 Troubleshooting

The following pages contain possible problems you may encounter and solutions. Before calling Rain Bird, check this list. If you cannot solve the problem yourself, a simple program called "Clemar 2" is available to confirm that the Freedom System's repeater, FR-200, radios, PC, cable, and telephone interface are properly functioning. It is available by calling Rain Bird Golf Technical Services at 1.800.984.2255 and pressing 4, or faxing a request to 626.912.3616.

Problem: **The Freedom System base unit is not working correctly, not responding properly, or not responding at all.**

Solution:
- Check the power light on the base unit to be sure that the base unit has power.
- Try to reset the base unit by entering the 676* command with the handheld radio.
- Watch the transmit light on the base unit while resetting with the handheld radio. It should light to indicate that it is receiving the signal from the handheld radio.
- Check to see if you need a password to gain access to the system.

Problem: **You made service adjustments to the autopatch unit and the unit no longer works with the Freedom System.**

Solution: While you cannot make specific adjustments to the autopatch unit through the handheld radio or telephone, you can restore the factory default settings:

Unplug the power cord to the base unit. The autopatch unit is factory configured for use with the Freedom System. To return the autopatch unit to the factory default settings, enter the **693*** command from a telephone or handheld radio. All the information in the autopatch unit's configuration memory will be replaced with the factory defaults settings for a Freedom System.

Problem: **The Freedom System is locked up.**

Solution: Unplug the power cord to the base unit. Turn off both the repeater unit and the computer completely; then turn them back on.

Problem: **Maxicom^2 and the handheld radio are not communicating.**

Solution: Unplug the power cord to the base unit. Locate the switch block and make sure that the switches are set correctly. The switch block is on the FR-454 Repeater PC Board, the large printed circuit board. Switch 1, 3, and 5 should be in the OFF position. Switch 2, 4, and 6 should be in the ON position. These positions enable the unit for the standard tone of the 100 Hz CTCSS tone.

Problem: **You hear an error tone.**

Solution:
- If you hear one low-pitched tone, the radio micro-controller is not working properly.
- If you hear alternating tones (the second at a lower pitch) the radiofrequency synthesizer is malfunctioning.
- If you get one or both of these error messages, turn off the handheld radio and try again. If the problem still persists, send the radio in for repair.

Problem: **A short warning tone sounds every 15 seconds while the handheld radio is on.**

Solution: Recharge the battery pack. (A final longer tone means that the battery is discharged and the radio has turned itself off.)

Problem: **The handheld radio does not work at all.**

Solution:
- Make sure the battery is installed correctly.
- Change or replace the battery.
- Try the battery from a working radio. If the radio works with that battery, the original battery may be bad.
- Try a different battery charger. The original charger could be defective.

Problem: **The radio reception is poor.**

Solution: Move to a different location. Reception can often be improved by moving a short distance, especially inside buildings. The radio's range with a standard battery pack is several miles within lines-of-sight.

Problem: **Noise or hiss sounds in the radio unit.**

Solution: Press and release the monitor button to activate the squelch function, which will mute the noise.

Problem: **You cannot hear calls from other radios.**

Solution:
- Press and release the monitor button to activate the squelch function, which will mute any noise.
- Be certain that your radio is receiving on the same frequency as the caller is transmitting.
- Recharge the battery.
- Try the battery from a working radio. If the radio works with that battery, the original battery may be bad.
- Change or replace the battery. If it still will not power the radio, try a different charger. The original charger could be defective.

Problem: **Your calls cannot be heard on other radios.**

Solution: Make sure that your radio is transmitting on the receive frequency of the radio you wish to call.

Problem: **The transmit/busy lamp does not light or is dim when you transmit.**

Solution:
- Conserve the battery. Do not hold down the PTT button longer than is necessary. Also, battery power is used while the radio is left on to receive calls. If practical, switch off the unit.
- Make sure the battery has been fully charged.
- Change or replace the battery.
- Try the battery from a working radio. If the radio works with that battery, the original battery may be bad.
- Try a different battery charger. The original charger could be defective.

Problem: **You hear a busy signal when you try to contact Maxicom^2.**

Solution: If you contact Maxicom^2 when it is already on-line with a site, you will hear a busy signal, which consists of many long tones, after you have entered a site number other than 0. If you hear a busy signal, enter #* and hang up. If someone is manually on-line, he or she will see a message on the Maxicom^2 screen indicating that a remote user wants to get on-line and will be asked if they want to terminate their contact. Call again in a few minutes because the manual user may have terminated contact or the automatic upload/downloads may have been completed.

Problem: **You cannot hang up the phone.**

Solution: Before you enter #*, wait for a period of silence. The modem cannot send a beep and listen to your commands simultaneously. Enter # when the modem is not sending a beep. After the modem receives the #, it will stop sending a busy signal so you can enter the * and hang up.

Problem: **You hear a busy signal while you are already on-line.**

Solution: If you are on-line with a site and then hear the busy signal, someone at Maxicom^2 has terminated your contact. Enter #* and hang up. While you are on-line with Maxicom^2, all of the automatic uploads and downloads will be postponed so they do not interrupt your call.

Problem: **You hear an error beep followed by a busy signal.**

Solution: If you try to contact Maxicom^2 during a time that is outside the Freedom Time Window, you will hear an error beep followed by a busy signal after you enter your password. You are being locked out by the Freedom Time Window, not by a manual or automatic call. Wait until the Freedom Time Window reopens before you try to call again. If you are already on-line and the Freedom Time Window closes, you will not be cut off. You will be able to complete your call and hang up as usual.

Problem: **Maxicom^2 is unable to contact a site.**

Solution: If Maxicom^2 is unable to contact a site, you will hear an error beep followed by a busy signal. The modem may have been disconnected, so do not try to call back.

Telephone interface with the Freedom System

You can contact the Freedom System and operate the Maxicom[2] system from a remote location via telephone. You may also use the handheld radio to receive and send calls from the field through the Freedom System base unit. In order to use the Freedom System's full capabilities, you will need to connect a dedicated phone line to the Freedom System base unit.

Any modem, desk telephone, answering machine, etc., should be on a separate line, designated as telephone line "X" in fig. 8. They should not be on the same telephone line that is serving the Freedom System base unit.

A second dedicated line, designated as telephone line "Y" in fig. 8, is required for the Freedom System base unit and to connect a telephone that you may wish to have work with the Freedom System.

The dedicated telephone line "Y" plugs into the RJ11 socket of the Freedom System base unit marked "Phone Line Input." If you are also using a telephone with the Freedom System, you will need a phone line splitter.

Refer to fig. 8 for complete details on installation of the telephone line and other related equipment.

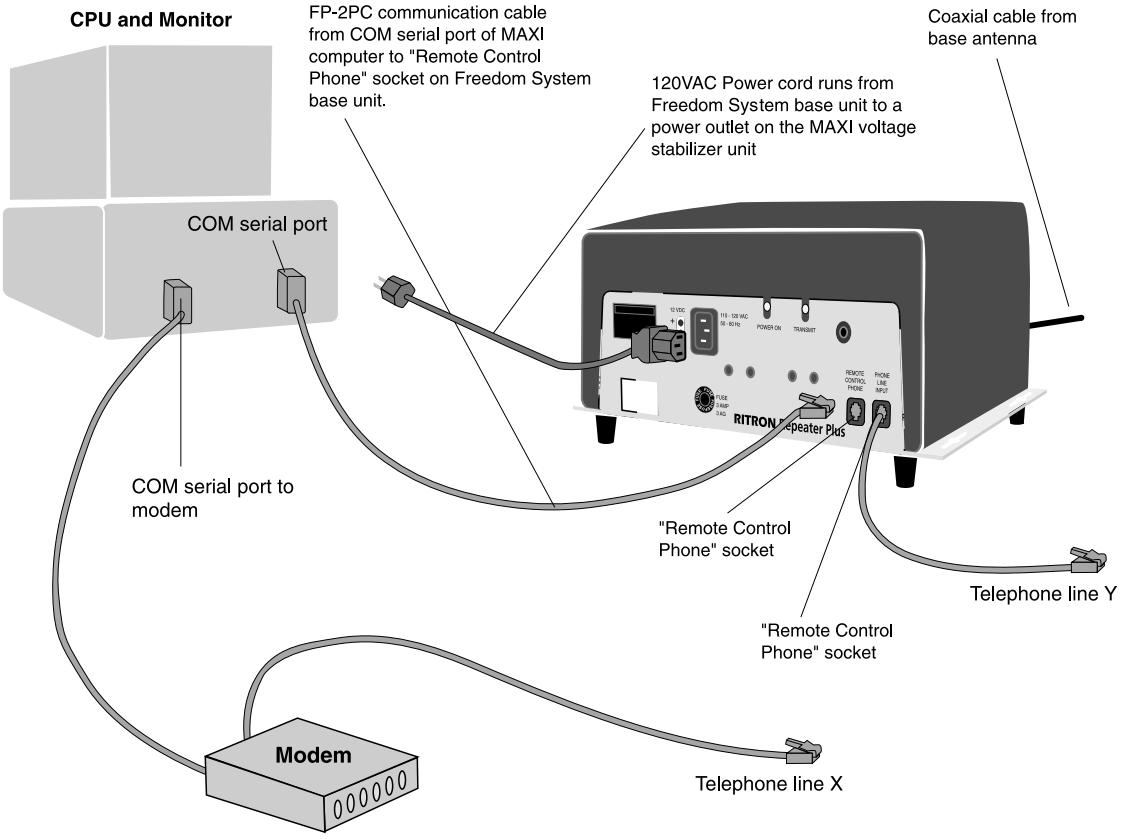

Figure 8: Configuration of telephone interface and Freedom System

Using the handheld unit for telephone operations

Answering a phone call

1. Press and hold the **PTT** button and press *****.
2. Answer the call as you would with a normal telephone, speaking into the microphone. Press and hold the PTT at all times when you are talking.
3. Release the PTT button in order to listen to the person on the other end of the line.

   The radio will emit a "cutover" beep when you release the PTT button. Be sure to tell the person at the other end of the line to wait for the beep before he or she begins to talk.

   The length of a telephone call is limited to five minutes. The Freedom System will emit two short warning beeps 20 seconds before the five minutes expire.

Hanging up

1. Press and hold the **PTT** button.
2. Enter **#*** even though the other party has hung up.
3. If you fail to hang up, you will hear a dial tone after 10 seconds and hear a high/low warble beep to indicate that you need to hang up.

Making a telephone call

To make a telephone call from the handheld radio unit:

1. Press and hold the **PTT** button.
2. Press ***** to get a dial tone.
3. Enter the telephone number just as you would on a normal telephone. Remember that you must press and hold the PTT button as you enter the number.
4. Release the PTT button, wait for the call to go through, and the other party to answer.
5. During the phone conversation you must press and hold the PTT button on the handheld radio unit at all times when you are talking.
6. Release the PTT button to listen to the other person when he or she is talking.
7. The Freedom System provides a "cutover" beep when you release the PTT button. Tell the person at the other end of the line to wait for the beep before he or she begins to talk.

Setting up the base unit (6xx* commands)

Once you have set up the Maxicom² computer to interact with the Freedom System, you are ready to set up the Freedom System base unit. All the commands that are entered into the radio that control base unit operation are know as 6xx* commands. The base unit beeps four times when it receives a 6xx* command. If you do not hear any beeps, re-enter the command. If you still do not hear any beeps:

- Make sure the base unit is plugged into a 120 VAC power outlet.
- Make sure the radio is turned on.
- See the Troubleshooting section on pg. 25 for information on investigating possible problems with the radio's battery.

Begin setting up the base unit by putting it in the start-up mode (see the first command, below). You may later enter additional base unit commands if you choose.

Command name	Command	Function	Additional comments
Base unit start-up mode	**671***	• Allows the base unit to receive commands from the radio. • Allows the base unit to receive commands from a touch-tone telephone. • Rings the radio when incoming telephone calls come into the base unit.	You may place the base unit in the start-up mode at any time by entering 671* from the radio or a touch-tone telephone.
Forward incoming telephone calls to the radio with one ring	**675***	• Allows the radio to transmit commands to the base unit. • Allows the user to make outgoing telephone calls from the radio. • Forwards incoming telephone calls to the radio, and the radio will ring only once. The caller hears multiple rings, but the radio user will only hear the first ring. The radio user can answer the telephone call at any time before the caller hangs up.	When in this mode, the base unit will not answer incoming telephone calls.
Forward incoming telephone calls to the radio with multiple rings	**673***	• Allows the radio to transmit commands to the base unit. • Allows the user to make outgoing telephone calls from the radio. • Forwards incoming telephone calls to the radio and the radio rings multiple times until the radio user answers the call or the caller hangs up. Both the caller and radio user hear multiple rings.	When in this mode, the base unit will not answer incoming telephone calls.

Command name	Command	Function	Additional comments
Set the base unit to answer incoming telephone calls	**672***	• Allows the radio to transmit commands to the base unit. • Sets the base unit to answer remote telephone calls which allows the user to operate the Maxicom^2 system by remote telephone. • Allows outgoing calls from the radio.	The handheld unit will not ring when the base unit receives an incoming telephone call. If a telephone call is connected to the same line as the base unit, the telephone will ring once, then the base unit will answer the call. The telephone will remain operational while the base unit receives the call.
Disable remote telephone calls to the base unit	**674***	• Allows the radio to transmit commands to the base unit. • Allows outgoing telephone calls from the radio. • Allows normal operation of the telephone connected to the same line as the base unit (if applicable to your particular base unit configuration).	This command prevents the base unit from answering incoming telephone calls, therefore it prevents operation of the Maxicom^2 by remote telephone. *Important:* To control Maxicom^2 from a remote server, enter the 672* command when you finish with the 674* mode. If you forget to do this, you can "call in." Let the telephone ring 30 times and the base unit will answer the call. This does not change the mode, however. You still must enter the 672* command to change the mode.
Reset the base unit to its normal (start-up) mode	**676***	• Returns all features and options to the default settings (the same settings as the start-up mode). • Terminates any action in progress (including a telephone connection) and reverts to the start-up mode.	
Forward a call from the base unit to the radio.	**679***	• Allows the base unit to forward a call it has already answered to the radio. • Enables the caller and the radio user to speak directly to each other.	This command must be sent via telephone after the base unit answers the call.

Caring for the Freedom System equipment

- The radio is not waterproof. Do not immerse it in water or expose it to excessive moisture.
- Do not expose the radio to extreme heat such as direct sunlight in a closed vehicle.
- Detergents, alcohol, aerosol sprays, and petroleum products can damage the case. Clean the case using a soft cloth moistened with water.
- Fully charge the battery pack before you use the radio for the first time. Do not fast charge a new battery; this can shorten battery life. See the handheld radio user manual for more information.
- After the initial charge, a battery should be charged overnight after each day of use.
- Use only the drop-in charger supplied with the Freedom System for recharging a battery pack.
- Do not use a battery when it is not fully charged. If the battery cannot power the radio, recharge the battery.
- Do not overcharge a battery. A standard battery should not be charged for more than 16 hours at a time.
- If a battery does not seems to hold a charge, try to continuously charge it for 16 hours. If it still fails, replace it.
- Once a battery has been fully charged, you may use the fast charge. Do not fast charge a fully charged battery.
- Do not charge the battery in temperatures colder than about 45° F.

Optional equipment

The following optional equipment is available from your Rain Bird Distributor:

Product model No.	Description
FTX-450-01	5 Watt/UHF handheld radio w/DTMF pad, 11 channel
FTX-450	5 Watt/UHF handheld radio w/o DTMF pad, 11 channel
FTX-450-011K	5 Watt/UHF handheld w/DTMF pad and w/high cap. NiCad
FTX-450-0011K	5 Watt/UHF handheld w/o pad and high cap. NiCad
FTX-450-011M 5	Watt/UHF handheld w/o pad and w/extra high cap. NiMH
SST-450	5 Watt/UHF MINI handheld radio w/DTMF pad, 11 channel
RPTFP-FT	Programming charge R/B frequency per radio
BPX-8N	Replacement 700 mAh battery for FTX
BPX-8N-HC	Replacement 850 mAh battery for FTX
BPX-8N-MH	Replacement 1100 mAh battery for FTX
BPS-6	Replacement 850 mAh battery for SST
FCP-FS	Fast rate drop-in charger for handheld radio
BCP-AD	Standard rate charger for FTX handheld radio
BC-A	Cube charger for FTX and SST handheld radio
BCPS-FS	Fast rate charger for SST handheld radio
LHX-AT	Leather holster for handheld radio
LHX-A	Leather holster for standard radio w/o pad
MHX-A	Holster, cordura, w/nylon T-cord
CBX-A	Replacement belt clip (w/screws)
MHS-A	Holster for SST handheld radio
RSM-3X	Speaker/microphone
RHD-1X	Headset, single ear, in line PTT
RHD-4X	Headset, dual ear, heavy duty
REP-2	Earphone
RSM-2X	Remote speaker microphone
AFM-450	Antenna, 6”, flexible, 450-470 MHz
AFM-450S	Antenna, 3”, flexible, 450-470 MHz
AFS-450	Stubby antenna for SST handheld radio
AFS-450-S	Stubby antenna for SST handheld radio
RPT-PK	Programming kit for Freedom handheld radios; push-to-talk; programming plug
RPT-PCPK	Programming kit for Freedom handheld radios; PC compatible computer

Battery life and charging time

Battery life (90-5-5 duty cycle)

Model BPX-8N	BPX-8N-HC	BPX-8N-MH	
Capacity	650 mAh	800 mAh	1100 mAh
Type	NiCad	NiCad	NiMH
Five watts			
Battery saver enabled	8 hrs.	9.8 hrs.	15.8 hrs.
Battery saver disabled	4.7 hrs.	5.8 hrs.	8.7 hrs.
90% duty cycle	7.2 hrs.	8.8 hrs.	14.2 hrs.
5% duty cycle	24 mins.	29 mins.	47 mins.
Two watts			
Battery saver enabled	13.3 hrs.	16.4 hrs.	24.6 hrs.
Battery saver disabled	6.2 hrs.	7.6 hrs.	11.4 hrs.
90% duty cycle	12 hrs.	14.8 hrs.	22.1 hrs.
5% duty cycle	40 mins.	49 mins.	1.2 hrs.

Charging time

Model	BPX-8N	BPX-8N-HC	BPX-8N-MH
Capacity	650 mAh	800 mAh	1100 mAh
Type	NiCad	NiCad	NiMH
Standard rate charge time:	12-14 hrs.	16-18 hrs.*	20-24 hrs.*
Fast rate charge time:	1.5 hrs.	1.5 hrs.	1.5 hrs.

***We strongly recommend the use of fast-rate chargers with these batteries.**

FCC regulations

Telephone interface information

Specifications

Ringer equivalence: 0.7B

Universal service order code: RJ11C

DOC number: 1084 3399 A

Prohibited connections

The FP-200 autopatch unit may not be connected to

a. party telephone line

b. telephone line providing phone service

Installation requirements

All subscriber connections to the telephone system are to be made with standard plugs and telephone company supplied jacks (or their equivalent). This set-up will quickly disconnect in the case of a malfunction that could cause harm to the telephone network.

Customers' responsibilities

Customers who connect this equipment directly to the public switched telephone network (PSTN) are required to provide an approved telephone equipment coupler between the Freedom System FP-200 autopatch unit and the PSTN.

Rights of the telephone company

When properly connected to the PSTN, the telephone company has the right to temporarily disconnect service to any device causing harm to the system. The telephone company will, however, give prior notice if practicable. If prior notice is not given, the company will:

1. Promptly notify you after service is disconnected.
2. Give you the opportunity to correct the situation that has caused the disconnection.
3. Inform you of your right to file a complaint with the Federal Communications Commission (FCC) according to the procedures set forth in Part 68 of the FCC Rules and Regulations.

The telephone company also has the right to make changes in the facilities, equipment, operations, and procedures. If the company can foresee that the changes will cause your equipment to be incompatible, it will give you adequate prior notice to allow you to make the necessary changes to ensure uninterrupted service.

Further information is available in:

Part 68, Subpart B	Conditions on use of terminal equipment
Part 90, Subpart O	Private radio
Paragraph 90.476	Interconnection of fixed stations and certain mobile stations
Paragraph 90.447	Restrictions on interconnected systems

If problems occur

If a problem occurs that causes interference or difficulty within the telephone network, disconnect the Freedom System (FP-200 autopatch unit) from the telephone network by removing the modular plug from the telephone jack (Phone Line Input) on the Freedom System base unit.

Neither you nor your distributor should attempt to repair the Freedom System base unit, the FP-200 autopatch PC board, or the RR-454 PC board. Any unauthorized repair may seriously affect the compliance with the rules under which the unit is registered. Remove the unit from service and contact Rain Bird through your Rain Bird Distributor.

FCC radio regulations

Assignment and use of 25 KHz frequency offsets

A. Frequencies separated by 25 KHz (wideband) from regularly assignable frequencies in the 450-470 MHz band may be assigned in the land mobile services in accordance with the following conditions:

   1. All stations will be licensed as mobiles, but they may serve the functions of base, fixed, or mobile relay stations. Such stations are limited to two watts output power.
   2. All operations should be on a secondary, non-interference basis to the primary operations. They are not entitled to protection from such stations.
   3. Where the primary channel availability is indicated in more than one service, the frequency coordination requirements in section 90.175 apply in all services. (See section 90.555 [a] for identification of service abbreviations.)
   4. Wide area operations will not be authorized. The area of normal day-to-day operations is described in the application. It states the maximum distance from a geographical center (latitude and longitude).
   5. Applications for stations under this part must provide a statement of proposed use, but are otherwise exempt from any limitation on the number of frequencies assignable contained elsewhere in Part 90.
   6. Antennas of mobile stations used as fixed stations communicating with one or more associated stations located within 45 degrees of azimuth shall be directional and have a front to back ratio of at least 15 dB. Except as provided below, the height of the antenna used at any mobile station serving as a base, fixed or mobile relay station may not exceed seven meters (20 feet) above the ground.
      - There is no limit on the length or height above ground of any commercially manufactured radiating transmission line when the transmission line is terminated in a non-radiating load and routed at least seven meters (20 feet) interior to the edge of any structure or is routed below ground level.
      - Only sea-based stations and central alarm stations operating on frequencies allocated for central station protection operations may use antennas mounted not more than seven meters (20 feet) above the man-made structure, including antenna structures.

B. You can coordinate other special frequencies with Rain Bird and Cara Enterprises (801) 278-9728.

Safety standards

The FCC (with its action in General Docket 79-144, March 13, 1986) has adopted a safety standard for human exposure to radio frequency electromagnetic energy emitted by FCC regulated equipment. We strongly recommend that you observe these standards, especially the guidelines below:

- Do not position the radio antenna near the face, eyes, or other exposed parts of the body while transmitting. Keep the radio vertical, two-to-three inches away, while talking into the front panel grill.
- Do not press the PTT button unless you intend to transmit.
- Do not operate the radio equipment near electrical blasting caps or in an explosive atmosphere.
- No repairs should be made to any of the equipment except by an authorized repair person. Federal law prohibits you from making any internal adjustments to the transmitter or from changing transmit frequencies, unless you are specifically designated by the licensee.

Licensing

The FCC requires you to obtain a station license for your radios before using the equipment to transmit, but does not require you to obtain an operating license or permit. The station licensee is responsible for ensuring that the transmitter power, frequency, and deviation are within the limits specified by the station license.

The station licensee is also responsible for proper operation and maintenance of his or her radio equipment. This responsibility includes checking the transmitter frequency and deviation periodically using the appropriate methods.

In order to receive an FCC license for either VHF or UHF frequencies, you must submit an FCC application form. An FCC license application packet is included with the Freedom System.

License application

See the included packet.

Service information

If your Freedom System equipment (including the Freedom System base unit, handheld radio, or other auxiliary equipment) fails to operate properly and needs to be repaired, contact your Rain Bird Distributor from whom you purchased the equipment. In most cases, the Rain Bird Distributor will be able to determine the cause of the problem and take the necessary action to correct it. If he is unable to correct the problem, he will then contact Rain Bird for assistance.

RAIN BIRD®

PN 633888